ATMOSPHERIC SOLAR RECEIVER FLOW INVESTIGATION

M. Fesharaki
H. Halozan
Institute of Thermal Engineering

J. Woisetschläger
Institute of Thermal Turbomachinery and Machine Dynamics
Graz University of Technology
Austria

ABSTRACT

Solar thermal power plants, suitable for solar radiation utilization in the MW range, are either of the farm concept using oil as heat transfer in the primary cycle and steam for power generation, or of the tower concept, using gas in the primary cycle and again steam for power generation, or with direct steam generation. Within the research project "Thermal Energy Production - Efficiency Improvement and Emission Reduction" funded by the Austrian Science Foundation, a tower concept using air directly for heat absorption and as working medium for a gas turbine is being investigated.

The system consists of a volumetric receiver with a ceramic matrix and an inverted gas turbine cycle (IGTC). The air is heated in the receiver by solar radiation up to 1000°C and expanded in the gas turbine to a pressure of about 0.3 bar; the exhaust air from the turbine runs through a recuperator and a second cooler, the compressor inlet is about 50°C. The compressed air is heated in the recuperator to about 600°C and recirculated to the receiver.

Another approach would be to modify the conventional IGTC to a combined cycle plant. The exhaust gas stream from the gas turbine is split up into two parts, one is supplying a recuperative heat exchanger for preheating the compressed recirculation to 500°C (in the gas turbine concept was 600°C), the other part is used to supply a dual-pressure steam cycle.

The problem of this promising concepts is the recirculation of the hot air, which has to be kept at a maximum; it is responsible for a significant improvement of the efficiency. In an experimental rig the flow behaviour of the working medium in the receiver is being examined.

NOMENCLATURE

η_{is}	Isentropic efficiency	[ ]
A	Surface area	[m^2]
C_s	Radiation coefficient	[W/m^4K]
E	Emission coefficient	[W/m^2]
l	Length	[m]
Nu	Nusselt number	[ ]
Pr	Prandtl number	[ ]
Q_{inp}	Heat input	[kW]
Q_{out}	Heat output	[kW]
Re	Reynolds number	[ ]
T_{Tube}	Tube temperature	[°C]
T_{Air}	Air temperature	[°C]
U	Velocity	[m/s]
α	Heat transfer coefficient	[W/m^2K]
ε	Emissivity	[ ]
ρ	Density	[kg/m^3]
ϕ	Circumferential angle	[ ]
h	Enthalpy	[kJ/kg]
ν	Kinematics viscosity	[m^2/s]
η	Dynamics viscosity	[$kgm^{-1}s^{-1}$]

INTRODUCTION

The present situation in the world concerning energy utilization requires new ways and strategies: presently about 95 % of the total energy demand is covered by fossil fuels, and this total energy demand is increasing caused by both the rapidly growing population, mainly in the developing countries, and by the backlog demand of these countries. Burning fossil fuels has, however, a harmful influence in our atmosphere, and a change of the present climate is expected caused by increasing CO2 concentrations in the atmosphere: the level already reached is higher than the level before the last glacial period, the temperature increase expected until the end of the next century is about 4 K.

Presented at the 1995 ASME Cogen-Turbo Power Conference
August 23-25, 1995 - Vienna, Austria

This situation requires measures to find a way out: one is the efficient utilization of fossil fuels, the second is the step back to renewable energy sources, a step to solar energy utilization. Solar energy can be utilised in different ways, either indirectly by hydro power, biomass, wind and waves, or directly by converting the solar radiation into heat or electricity, respectively.

Although power generation from solar energy is not economic today one has to be aware that it is an option for the future, because burning fossil fuels is going to become more expensive by calculating the external cost also, i.e. the pollution of the environment and the global warming. However, solar plants have to be highly efficient considering the low energy density of solar radiation, the limited time of availability and the storage problem.

SOLAR THERMAL POWER GENERATION

Power generation from solar radiation is presently carried out by using

- thermal power generation using
  - distributed collector systems (DCS) or
  - central receiver systems (CSR).

- photovoltaic energy conversion for producing electricity directly

with the exception of distributed collector systems, which have been built on a commercial basis (due to a special legislation mainly in California, USA), all other large-scale power generating systems are of the experimental type: The investment cost and therefore the electricity cost produced by such systems are, considering the cost of fossil fuels and conventional power generation from coal, oil and gas, high.

In the case of a steam cycle there are limitations in temperatures due to the available materials. The maximum live steam conditions presently in use in conventional thermal power plants are 600°C at 300 bar and the efficiencies which can be achieved are near 50% depending on the condenser temperature. To increase the efficiency further, i.e. to be able to utilise higher temperatures, gas turbine cycles are required. Conventional combined cycle power plants can already achieve efficiencies up to 58% [7].

Looking at solar thermal plants already realised or available as a concept, there are principally two concepts of distributed collector systems (DCS), one with thermal oil as heat carrier feeding a steam generator and one using directly steam as a heat carrier. The efficiency of the later system can be higher than that of the former one; the problems are in the instabilities of the system in the case of clouds covering parts of the collector field [8].

The second concept which looks more promising from an efficiency point of view is represented by centralreceiver systems (CRS), consisting of an heliostat-(mirror) field and a tower with a receiver that absorbs the concentrated solar radiation [1, 3]. This concept, realised only in experimental plants, offers much higher efficiencies. However, this concept covers a lot of different solutions: receivers can be of the cavity type or of the volumetric type, direct and indirect systems can be used, heat carriers can be water/steam, sodium, and air. The state of the art of CRS- plants is described by DLR. [2]

Photovoltaic systems can presently achieve efficiencies of about 12 %. In the case of thermal systems we have to reconsider S. Carnot, who has defined the requirements for increasing the efficiency of thermal systems already in 1823: the inlet temperature of the process has to be raised as high as possible and the outlet temperature has to be taken as close as possible at the ambient temperature. We will also achieve high efficiency in a process where high temperature can be utilised. By concentrating solar radiation temperatures up to 3,000°C can be realised.

Volumetric Receiver with Inverted Gas Turbine Cycle

This paper deals with a concept consisting of a volumetric receiver feeding an inverted gas turbine cycle (IGTC).

The heat carrier is air at ambient pressure. This air is heated in the receiver to a temperature of about 1,000°C ans passes through the gas turbine. The inlet conditions are about 1,000°C at a pressure of 0.9 bar, considering pressure losses between receiver and gas turbine inlet. In the gas turbine the air is expanded to a pressure of about 0.3 bar, then cooled down in a recuperator and compressed again to atmospheric pressure. In the recuperator the air is heated up to about 500°C and then recirculated to the volumetric receiver. Figure 1 shows the arrangement of the IGTC plant in the tower [1, 3].

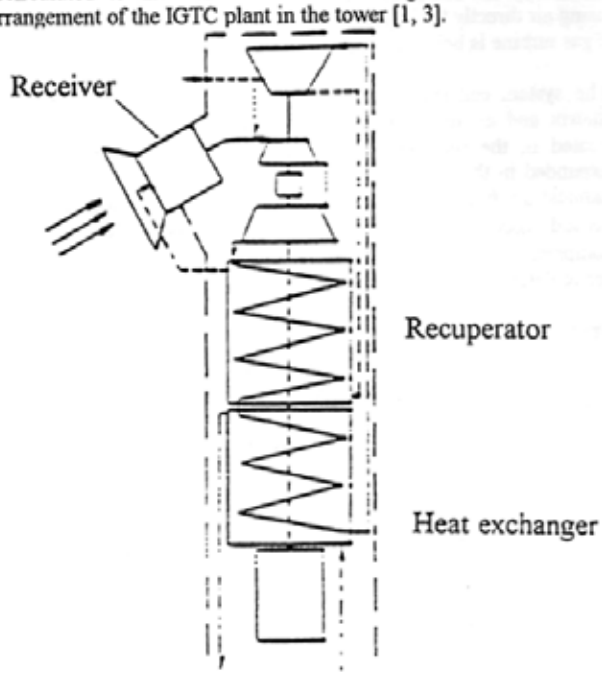

Fig. 1 Arrangement of the IGTC plant in the tower.

RECEIVER DESIGN

The volumetric receiver consists of a ceramic matrix structure, which is designed in a way that the concentrated solar radiation is absorbed three-dimensionally in this matrix. To achieve the maximum efficiency a circulation rate of 100% would be necessary; what we really hope to achieve is a circulation rate of about 70% [1, 3].

The absorber matrix consists of small ceramic tubes which are open to the receiver surface. The recirculated air comes from the recuperator, flows through the tubes and cools the inner surface of the tubes. At the end of the tubes the air flow should return and enter the open spaces between the tubes; flowing back the air cools the outer surface of the tubes and goes to the turbine inlet. [1, 3].

The concept of the volumetric receiver with recirculation has three main problems:

1. The heat transfer between the ceramic matrix and the air has to guarantee a matrix temperature below 1.400 °C for heating up the air from 500 to 1000°C.
2. The recirculation of the air with as little air dissipation as possible to keep a high efficiency of the system.
3. Small losses to the ambient although the temperature of the matrix is very high.

The critical point of the IGTC receiver is the ratio of the recirculated air. The problem of this concept is the 180° turn of the air flow without losses to the ambient. For experimental purposes two concepts have been chosen:

- The first concept was to investigate the possibilities of this 180° turn from the tubes to spaces between the tubes depending on the air speed corresponding to an earlier proposal (1).

- The second concept was splitting up the recirculated air into two streams, one part coming through the tubes in the centre of the receiver as mentioned above and the other part using the Coanda effect blown through nozzles along the surface of the receiver to stabilise the flow conditions. The Coanda effect is used to avoid that air coming out of the tubes can leave the suction zone of the receiver matrix.

Heat transfer in the receiver:

The velocities necessary to keep the temperatures of the air and the ceramic matrix within the range mentioned above it is necessary to investigate the heat transfer conditions in this matrix.

A volumetric receiver is principally an open heat exchanger. As published in the literature on solar thermal plants [8], open volumetric receiver are principally parallel-flow heat exchanger, because the recirculated air is mixed up at the front of the receiver with the ambient air. This mixture is drawn into the receiver matrix and heated up there.

The receiver suggested in this paper is a mixture of counterflow and parallel flow heat exchanger. The receiver consists of tubes, that are arranged with the open end in direction of the heliostat area. The solar radiation is focused into the tubes and thereby heated up. The Tubes are cooled by the recirculated air, mixed with a certain amount of ambient air, which corresponds to the air dissipation, and the sucked air. The region where the air is ejected from the tubes corresponds to a counter-flow heat exchanger, whilst the suction part acts as a parallel flow heat exchanger.

PRINCIPLE OF HEAT TRANSFER IN THE RECEIVERS TUBES

The focused sun radiation from the heliostat heats up the receiver tubes. The front of the tubes is getting extremely hot. At one hand the air is flowing through the tubes and cooling them by convection. On the other hand, as the front of the tubes are very hot and the back is cooler, the solar radiation is transported by heat radiation to the back side of the matrix .Fig 2 shows the principle of heat transfer in the receiver tubes.

$$Q_{(Inp)} = \Sigma Q_{Out} + \Sigma E$$

$$\Sigma Q_{Out} = \alpha \times A \times (T_{(Tube)} - T_{(Air)}) = \dot{m} \times \Delta h_{(Air)}$$

$$E = C_S \times \varepsilon_1 \times \varepsilon_2 \times \Phi_{(12)} \times \left[\left(\frac{T_1}{100}\right)^4 - \left(\frac{T_2}{100}\right)^4 \right]$$

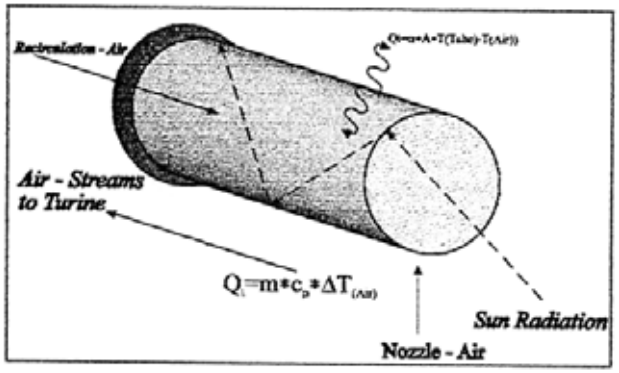

Fig .2 Principle of heat transfer in the receiver tubes

The air flow in the tubes should be possibly a turbulent flow with a Reynolds number greater than 2300 to 10^6.[4]

For the heat transfer at turbulent flow conditions of gases and fluids in tubes Gnelinski presented an equation that also includes the transition region [3].

$$Nu_\infty = \frac{\alpha \times d_{(Tube)}}{\lambda}$$

$$Nu_\infty = \frac{\frac{\xi}{8} \times (Re - 1000) \times Pr}{1 + 12.7 \times \sqrt{\frac{\xi}{8}} \times (Pr^{\frac{2}{3}} - 1)}$$

$$\xi = (1.62 \times \log_{10} \times Re - 1.64)^{-2}, Re = \frac{U \times d}{\gamma}$$

The heat transfer coefficient is a function of Nusselt number ands again a function of Reynolds number. As greater the Reynolds number, the higher becomes the heat transfer coefficient. Using this equation the heat transfer coefficient between the air and the tubes of the receiver matrix can be calculated.

The problem is the velocity of the air in the tubes, at the end of the supply tubes and at the entrance into the suck tubes. One has to realise that this is an open volumetric receiver which requires a high recirculation rate. Too high air outlet velocities cannot be allowed, because then this air cannot be sucked any more. Furthermore, the recirculation of the preheated air is necessary, otherwise, considering the low heat transfer coefficient of gases with high temperatures at ambient pressure, the desired temperature level of about 1000°C cannot be achieved.

Otherwise, the air velocity is directly influences the heat transfer in the receiver. To get an answer on possible velocities, the following experimental investigations have been carried out.

INVESTIGATION OF THE FLOW PATTERNS OF RECEIVER CONCEPTS

The capacity of the final demonstration plant was decided to be 1 MW. To carry out experimental investigations with a "cold" model to investigate the flow patterns occurring at the surface of the open volumetric receiver, it was necessary to keep the laws of similarity in model experiments. To show optically the air flow behaviour, the air was mixed up with smoke, as shown in several pictures.

This is the only way to get reliable results corresponding to real operating conditions. The laws which have to be kept are geometric similarity, flow similarity and the similarity of the momentum of the outlet air stream.

Geometric similarity:

The characteristic length is related to the diameter of the receiver.

$$K_1 = \left(\frac{D_{Tube}}{D_{Rec}}\right)_{Real} = \left(\frac{d_{Tube}}{d_{Rec}}\right)_{Test}$$

Flow similarity:

The characteristic value to model the flow behaviour is the Reynolds' number Re. This number is determined by the characteristic date of the planned real receiver and has to be kept exactly to ensure a flow pattern corresponding to the real conditions.

$$K_2 = Re = \left(\frac{U \times D_{Tube}}{\nu_{Air}}\right)_{Real} = \left(\frac{u \times d_{Tube}}{\nu_{Air}}\right)_{Test}$$

Momentum similarity:

At the surface of the open volumetric receiver the air flows to a open space and the momentum of the air stream is responsible for the return to the suction region. Therefore the outlet momentum has to correspond to the real conditions.[5]

$$k_3 = \rho \times U = G$$

Receiver model:

The calculation of the heat transfer has shown that the cooling effect of the receiver tube diameter of 60 mm can only be achieved if the velocity of air is at least 8.5 m/s.

Table. 1: Characteristic Data of Reality and Model

	U m/s	d (tube) m	Re	Nu –	α W/m²K	t °C	Pr —	ρ kg/m³	ξ —
Real	8.5	0.06	3800	14.16	20.6	760	0.7	0.7	0.042
Test	2.5	0.02	4000	20.5	20	16.6	0.7	1.2	0.041

The model for the first concept is shown in Fig. 3. The blower 1 represents the compressor and blower 2 to the gas turbine. Blower 1 supplies the tubes; the air emerges from these tubes and is drawn back through the spaces between the tubes by blower 2. For this concept an outlet air velocity of 2.5 m/s was required: The experiment showed that with this outlet velocity a recirculation did not occur, even with a velocity of 2 m/s only a recirculation of 50% could be achieved.

Fig 4 optically shows the stabilised fog at the receiver front in the experiment visualised by light shirt techniques. The fog length in front of the receiver was about 5 cm, In the real receiver it would be 4 times longer.

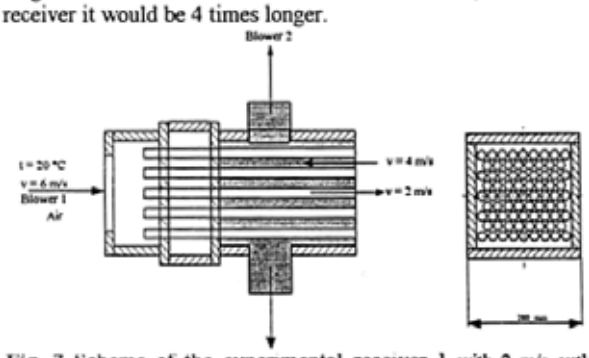

Fig. 3 Scheme of the experimental receiver 1 with 2 m/s outlet velocity.

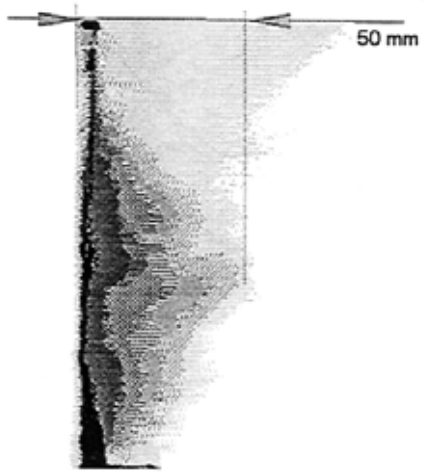

Fig. 4 Air flow pattern of experimental receiver 1 with 2 m/s outlet velocity

The second proposal

The arrangement of the second concept is principally similar to the proposal described before. The difference is that the recirculated air is divided into two substreams. Substream 1 is blown tangential to the receiver matrix by a nozzle which is arranged at one side of the receiver matrix. Substream 2 is blown out of the central tubes of the receiver matrix. Fig 5 shows the scheme of this arrangement.

The air blown through the nozzle to the receiver fits tightly to the surface of the receiver matrix [6](Coanda effect). From this surface the air sucked into the receiver.

Fig 6 shows the air flow at this experiment. The fog in front of the receiver matrix is much shorter than that of receiver 1, only about 2 cm. The air velocity at the tube outlet was about 4 m/s and at the inlet of the suck tubes about 6 m/s. This higher velocity ensures the heat transfer as well as the cooling capability of the receiver. The mass ratio between the two blowers amounts results in an recirculation rate of 70% with no ambient disturbance like wind. Local velocity measurements have not been possible, but an optimization of this concept may possibly result in a higher recirculation rate.

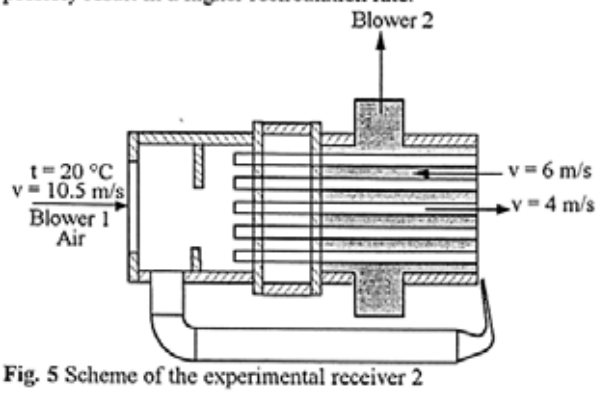

Fig. 5 Scheme of the experimental receiver 2

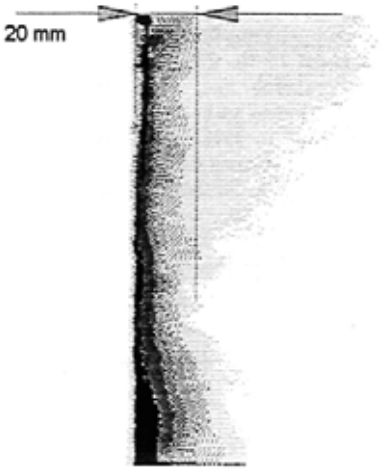

Fig. 6 Air flow at the experiment 2 with 4 m/s outlet and 6 m/s inlet velocity

INVERTED GAS TURBINE CYCLE

To achieve a highly efficient cycle, the heat input has to take place at a temperature as high as possible and heat rejection at the lowest temperature level available. In the Inverted Gas Turbine Cycle (IGTC) the gas turbine is fed with air at a temperature level of about 1000°C (1) at a pressure of 0.9 bar, considering pressure loses between receiver and gas turbine inlet. In the gas turbine the air is expanded to a pressure of 0.3 to 0.4 bar, corresponding to an outlet temperature of about 675°C. This expanded air is cooled be means of a recuperative heat exchanger down to 226°C, additional heat for a desalination plant reduces this temperature down to 50°C (5). This air is now compressed to atmospheric pressure of 1.1 bar and heated up in the recuperative heat exchanger up to a temperature of 637°C (7). This hot air is now recirculated to the volumetric receiver. Fig. 7 shows the cycle scheme.

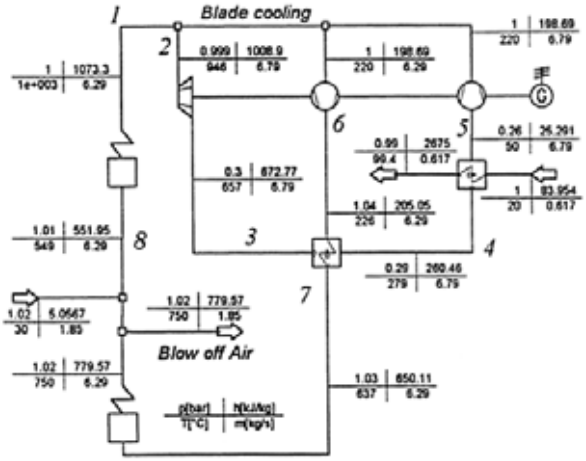

Fig. 7 Cycle scheme of solar plant with IGTC
(1 volumetric receiver, 2 gas turbine, 3 recuperator, 4 heat exchanger, 5 compressor, 6 generator)

In the receiver 70 % of the recirculated air - 30 % are losses - and ambient air are heated up again to a temperature of 1000°C. The efficiency of this cycle is about 25 %. This efficiency is strongly dependent on the recirculation rate, with 100 % recirculation the efficiency would increase up to 30 %, without any recirculation the efficiency drops to 15%. As mentioned above, the critical task in this project is keeping the recirculation rate as high as possible. Fig 8 shows the IGTC data t-s diagram. Table 2 shows the power balance of this cycle.

Tab. 2: Power Balance of the IGTC Turbomachinery

Turbomachinery	Isentropic efficiency	Power (kW)
Turbine	92%	2.284
Compressor	86%	1.218
Re ingestion	70%	
Electrical power output	—	1.000
Heat input		4096
Thermal efficiency	25%	—

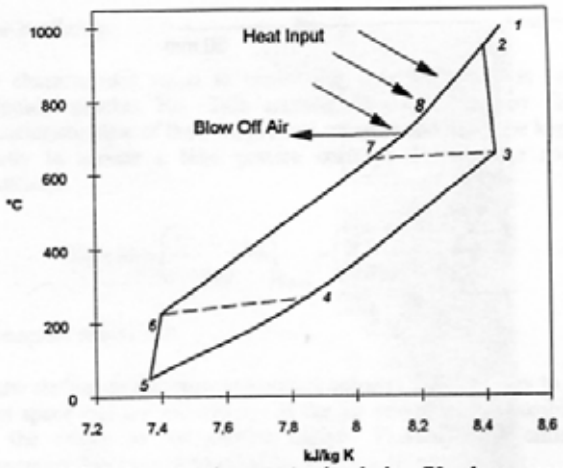

Fig. 8 :IGTC data t-s diagram (recirculation 70 : low pressure level 0.3 bar)

SOLAR COMBINED CYCLE SYSTEM

Another approach would be to modify the conventional IGTC to a combined cycle plant. The exhaust gas stream from the gas turbine is split up into two parts, one is supplying a recuperative heat exchanger for preheating the compressed recirculation to 500°C (in the gas turbine concept is was 600°C), the other part is used to supply a dual-pressure steam cycle.

The feed water is pumped to a pressure of 1.2 bar by the first feed water pump, preheated and evaporated. In the low pressure drum the cycle is split up: Saturated water is pumped up to a pressure of 140 bar, evaporated and superheated. The steam at the inlet of the high pressure section of the steam turbine has a temperature of about 580 °C. The steam is expanded in the steam turbine down to 3.35 bar (point 13 Fig 9). This steam is mixed with steam of the low-pressure system and feeded to the low-pressure stage of the steam turbine and expanded to 0.045 bar corresponding 31°C. The mass flow rate in the low pressure section as about 30 % higher than in the high pressure section. The efficiency of this combined cycle reaches 43 %.

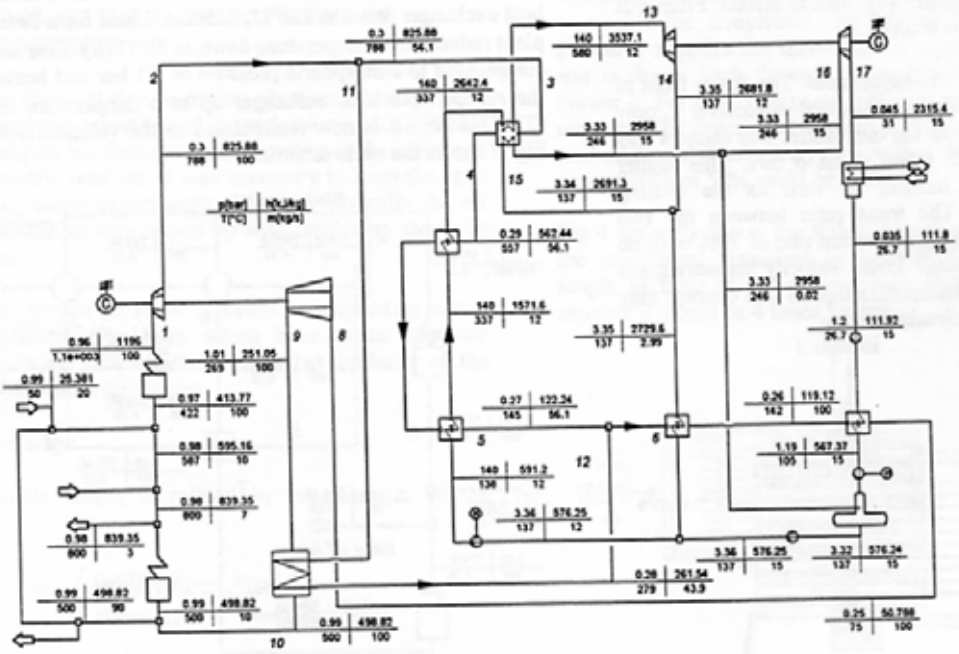

Fig 9: Cycle scheme of the IGTC combined cycle for a pilot plant of 35 MW

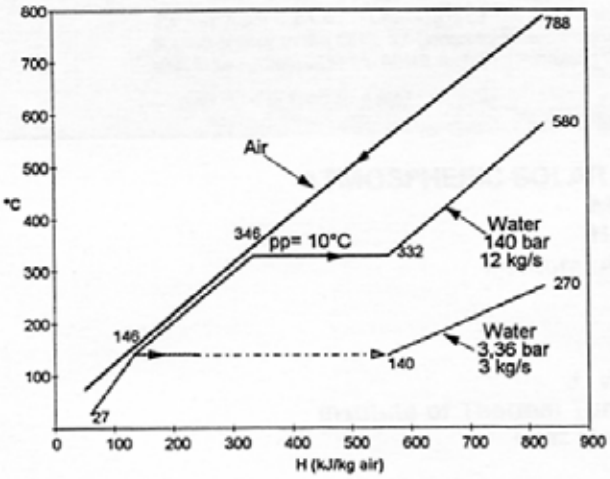

Fig. 10 Temperature-Enthalpy - Diagram IGTC combined cycle

The cycle can be demonstrated by using a temperature/entropy diagram (fig 11). This diagram shows very clearly the heat flow and heat distribution in this combined cycle including the pinch points as well as the heat distribution.

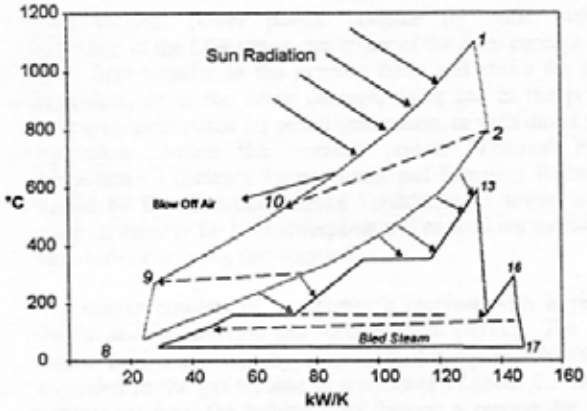

Fig 11: Temperature-Entropy Diagram of the IGTC combined cycle

As it was shown there are possibilities to achieve efficiencies in solar thermal plants, which are comparable with conventional systems. High efficiencies are the main goal for the future, because these efficiencies can help to lower the first cost and therefore the electricity generation cost of solar plants.

CONCLUSION

The 21.st century will be the century of rational energy utilization and utilization of renewable energy sources. In this sense this paper presents a new volumetric receiver for the efficient utilization of solar energy in a central receiver system. The volumetric receiver has been examined by a model experiment for its flow behaviour, and a recirculation rate of 70% can be expected.

Tab 3 Power balance of the IGTC combined cycle

Turbomachinery	η_{th}	η_m	**Power (kW)**
Gas Turbine	92%	98%	36.641
Compressor	86%	98%	-20229
High pressure steam-Turbine	91%	98%	10 197
Low pressure Steam-Turbine	90%	98%	9.538
Power output		**36 217**	**kW**
Re ingestion		77%	
Feed Pump		275	kW
Electrical Power Output **Gas -Turbine**		**16.085**	kW
Electrical power Output **Steam -Turbine**		**19.345**	kW
Electrical Power Output		**35.430**	**kW**
Heat Input		81.627	kW
Thermal Efficiency		**43%**	

For the utilization of the heated air, an inverted gas turbine cycle is used. The inverted gas turbine cycle has a efficiency of 25%. This efficiency can be increased up to 43% by adding a steam process. The schemes of and the design data are presented in this paper.

ACKNOWLEDGEMENTS

The authors are also grateful to the Austrian Science Foundation (Fonds zur Förderung der wissenschaftlichen Forschung **FWF**) for its financial support of this work.

REFERENCES

[1] Jericha, Starzer, Theissing. 1991 Towards A Solar - Hydrogen System. ASME Cogen Turbo Budapest.

[2] Solar Energy High Temperature And Technology And Application cologne 1987.

[3] Jericha, Theissing. 1991. Inverted Cycle Gas Turbine Solar Power Plant. Cimac,Florence.

[4] Verein Deutsher Inginieure 1993 VDI-Wärme Atlas PP(GB2).

[5] Starzer. 1992. Qualitative Untersuchung Der Strömung In Einer Gasturbinen - Brennkammer Mit Hilfe Eines Strömungsmechanich Ähnlichen Modells DLR

[6] Esdorn 1994 "Raumklimatechnik 1", Springer Verlag, PP 505-543

[7] Halozan 1993 "Rationelle Energienutzung" Institute of Thermal Energie Graz University of Technology PP 5.2

[8] Winter, Sizmann, Vant-Hull 1991" Solar Power Plants" Springer Verlag pp 231